EFFECTS OF AQUATIC CONTAMINANTS ON THE HABITAT SELECTION AND SPATIAL DISTRIBUTION IN FISH: A COMPLEMENTARY APPROACH TO TRADITIONAL ECOTOXICOLOGICAL TESTS

Efeitos de poluentes aquáticos na seleção de hábitat e distribuição espacial em peixes: Uma abordagem complementar aos testes ecotoxicológicos tradicionais

Daniel Clemente Vieira Rêgo da Silva

São Paulo

2017

Universidade de São Paulo
Instituto de Biociências - Departamento de Ecologia

Daniel Clemente Vieira Rêgo da Silva

EFFECTS OF AQUATIC CONTAMINANTS ON THE HABITAT SELECTION AND SPATIAL DISTRIBUTION IN FISH: A COMPLEMENTARY APPROACH TO TRADITIONAL ECOTOXICOLOGICAL TESTS

Efeitos de poluentes aquáticos na seleção de hábitat e distribuição espacial em peixes: Uma abordagem complementar aos testes ecotoxicológicos tradicionais

Tese apresentada ao Instituto de Biociências da Universidade de São Paulo, para a obtenção de Título de Doutor em Ciências, na área de Ecologia.

Orientador: Prof. Dr. Marcelo Luiz Martins Pompêo

São Paulo

2017

Ficha Catalográfica

Clemente Vieira Rêgo da Silva, Daniel

Efeitos de poluentes aquáticos na seleção de hábitat e distribuição espacial em peixes: Uma abordagem complementar aos testes ecotoxicológicos tradicionais

142 p.

Tese (Doutorado) - Instituto de Biociências da Universidade de São Paulo.
Departamento de Ecologia.

1. Ecotoxicologia
2. Análise de Risco Ambiental
3. Poluentes Aquáticos

Universidade de São Paulo. Instituto de Biociências. Departamento de Ecologia.

Comissão Julgadora

Prof.(a) Dr.(a) Sueli Ivone Borrely

Dr. Julio Cezar López-Doval

Prof.(a) Dr.(a) Odete Rocha

Prof. Dr. Marcelo Luiz Martins Pompêo

Orientador

Dedicatória

Dedico este trabalho aos meus pais, Ângela e Iberê, e à minha esposa e filho, Verónica e Gael, sem os quais eu não teria a inspiração e forças necessárias para chegar onde cheguei! Dedico também ao meu tio Clemente Silva Vieira Filho (in memorian), um dos homems mais humildes e altruístas que já conheci!

Epígrafe

"Let me tell you something you already know. The world ain't all sunshine and rainbows. It's a very mean and nasty place and i don't care how tough you are it will beat you to your knees and keep you there permanently if you let it. You, me, or nobody is gonna hit as hard as life. But it ain't about how hard ya hit. It's about how hard you can get hit and keep moving forward. How much you can take and keep moving forward. That's how winning is done!"

Rocky Balboa. Directed by:
Sylvester Stallone. Hollywood
(U.S.A.): MGM Studios /
Columbia Pictures, 2007, DVD.

Agradecimentos

A Deus, ADONAI, por ser minha fonte de forças e energia!

Aos meus pais Ângela e Iberê, os quais sempre me apoiaram em toda a minha trajetória.

A minha esposa Verónica, minha amada e companheira!

Ao meu filho Gael, um menino lindo, que veio trazer inspiração e forças para que eu continuasse lutando!

A minha família do Brasil... Roberta, Rodrigo, João Victor, Rafa e Tio Ricardo: A presença de vocês é indispensável para mim!

A minha família da Argentina: Os considero como irmãos de sangue!

Aos meus querido orientador e co-orientadores: Marcelo Pompêo, Teresa Paiva e Cristiano Araújo, os quais possibilitaram meu crescimento como profissional, me apoiando em todas as decisões científicas e acadêmicas! Vocês foram o pilar de mais essa minha vitória!

Aos colegas de pós-graduação do DEBIQ, especialmente ao Douglas, Rodrigo Marassi, Fernanda Sampaio, Patrícia, Lucas e Luiz.

As minhas maravilhosas alunas de IC: Thaíse e Amanda. Vocês foram um apoio imprescindível para minhas pesquisas!

À Lucinha, minha técnica favorita!

Aos pesquisadores e companheiros que me auxiliaram na escrita de meus artigos: Rui Ribeiro (Portugal), Julio Cézar Lopez-Doval (Espanha), Fernanda França, M. Neto (apoio total na reta final) e a querida Sheila Cardoso-Silva.

E agora no fim de meu doutorado, a todos os amigos que fiz no intercâmbio na UNAM (México-DF), em especial ao Alejandro, pela amizade e companheirismo em minha estadia em seu país. Muchas gracias amigo!

Resumo Geral

Os testes ecotoxicológicos convencionais (exposição forçada) são uma ferramenta importante quando o que se busca são os possíveis efeitos agudos e crônicos dos poluentes ambientais sobre cada indvíduo que é exposto. A desvantagem dessa abordagem está no fato de que os organismos são mantidos enclausurados dentro de recipientes com uma mesma concentração por várias horas e/ou dias. O teste de exposição forçada não tem relevância ecológica quando o ambiente modelado apresenta um gradiente de contaminação e os organismos podem se mover ao longo deste gradiente. Em muitos ecossistemas aquáticos, é comum observar um gradiente de contaminação, com as concentrações diminuindo com a distância da zona de descarga, de modo que os organismos não apresentam obrigatoriamente uma exposição contínua e forçada ao contaminante. Desta forma, este trabalho teve como objetivo a análise de como os poluentes aquáticos (e.g. Triclosan, Bisfenol, Atrazina e Cobre) influenciam o padrão de dispersão / seleção de habitat por duas espécies de peixes: *Poecilia reticulata* e *Danio rerio*, utilizando um sistema estático (não forçado) com vários compartimentos, formando um gradiente de contaminação com o composto a ser analisado. Todos os poluentes testados dispararam uma resposta de fuga nos peixes em concentrações ambientalmente relevantes. As concentrações que causaram a fuga dos organismos são menores do que aquelas que causam efeitos sub-letais em organismos aquáticos, incluindo peixes. Encontramos também em uma de nossas abordagens o potencial de formação de uma barreira quimica (fragmentação de habitat) pela liberação de poluentes nos corpos hídricos, reduzindo o potencial de migração dos organismos aquáticos. Por fim, um dos achados mais importantes está na interação das espécies entre si quando expostas a um gradiente de poluição. Nesse caso, a presença de uma espécie interferiu na distribuição da outra (redução do potencial de migração), quando ambas se encontravam no mesmo sistema. Sendo assim, a abordagem não forçada demonstra ser uma ferramenta poderosa na avaliação de risco ambiental, complementar aos testes ecotoxicológicos tradicionais.

Palavras-chave: ecotoxicologia, análise de risco ambiental, poluentes aquáticos

General Abstract

Conventional ecotoxicological tests (forced exposure) are an important tool when what is sought are the possible acute and chronic effects of environmental pollutants on each individual that is exposed. The disadvantage of this approach lies in the fact that the organisms are kept enclosed within containers of the same concentration for several hours and / or days. The forced exposure test has no ecological relevance when the modeled environment exhibits a contamination gradient and organisms can move along this gradient. In many aquatic ecosystems, it is common to observe a contamination gradient, with concentrations decreasing with distance from the discharge zone, so that organisms do not necessarily exhibit continuous and forced exposure to the contaminant. The objective of this work was to analyze how aquatic pollutants (e.g Triclosan, Bisphenol, Atrazine and Copper) influence the dispersion / habitat selection pattern of two species of fish: *Poecilia reticulata* and *Danio rerio*, using a static system (non-forced exposure) with several compartments, forming a gradient of contamination with the compound to be analyzed. All pollutants tested triggered an avoidance response in fish at environmentally relevant concentrations. The concentrations that caused avoidance on the organisms are lower than those that cause sub-lethal effects on aquatic organisms, including fish. We also find in one of our approaches the potential for the formation of a chemical barrier (habitat fragmentation) by the release of pollutants into the water bodies, reducing the migration potential of aquatic organisms. Finally, one of the most important findings is the interaction of the species with each other when exposed to a pollution gradient. In this case, the presence of one species interfered in the distribution of the other (reduction of the migration potential), when both were in the same system. Thus, the non-forced approach demonstrates to be a powerful tool in the evaluation of environmental risk, complementary to the traditional ecotoxicological tests.

Keywords: ecotoxicology, environmental risk analysis, aquatic pollutants

1. General Introduction

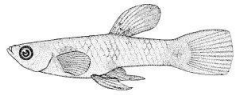

Water pollution is a problem related to urban and industrial development. Land use in watersheds is one of the most important factors in the degradation of aquatic ecosystems, due to point (discharge of effluents) and non-point (surface runoff) source pollution. A large number of contaminants is discharged indiscriminately in water bodies, and there is not always the treatment for the removal of pollutant loads (López-Doval et al., 2016). In the last decades, environmental protection agencies have paid attention to the question of the influence of these elements on the quality of life of aquatic organisms. To this end, there are legal tools, such as the Resolution of the National Council for the Environment (CONAMA) nº 357/2005 (CONAMA, 2005) and nº 430/2011 (CONAMA, 2011), which indicate the permitted values of several quality parameters in the aquatic environments and treated effluent in Brazil. The legislation indicates the ecotoxicological tests to complement the results of the physical-chemical analyzes, with the use of bioindicators, showing how much the pollutants interfere in the development of the individuals exposed to them.

According to Zagatto & Bertoletti (2008), for the ecotoxicological evaluation of a given environment, it is essential to be aware of the emission sources of the pollutants, as well as their transformations, diffusions and destinations in the environment. It is also important to know the potential risks of these pollutants to biota, including humans. The diversity of studies with a focus on acute and chronic effects is great, and to get an idea of the intensity of research involving the keyword "ecotoxicology", 4,246 records were found in the Web of Science database, of which 1,382 are related to aquatic pollution, and finally 342 involving fish. The responses surveyed range from the molecular level to the more complex level (the organism). Despite the importance of bioassays, there are still some outstanding issues regarding the relevance of measured responses, the type of exposure and the behavior of organisms when in contact with contaminants.

The major problem from the point of view of the environmental relevance of standard ecotoxicological tests (acute and chronic) is the matter of the confinement of organisms and the homogeneous environment to which they are exposed. It should be

noted that it is important to know the relationship between dose and response between pollutants and biondicators, as this provides important data on the level of individual, knowing how much an aquatic pollutant can interfere in the vital processes of each organism. The question is: In natural environments, are organisms really confined and exposed to the same dose of a pollutant for several hours, if not for several days? Does this dose tend to remain constant in such environment, without the influence of the mass of water on its dilution?

Another important approach that deserves to be highlighted is how environmentally relevant are the concentrations applied in ecotoxicological tests, that is, the doses produced for ex-situ tests correspond to those occurring in natural environments? And if so, how often? Several studies focus only on effects on organisms, even if the doses have to be high, and when the exposure of organisms has no effect, it is often understood that the compound does not pose a risk to the bioindicators who are exposed to it. International environmental agencies, such as the United States Environmental Protection Agency (USEPA), establish different safe concentrations for various compounds studied. Below these concentrations toxicity to aquatic organisms is not expected. As an example we have a report from the same agency showing the safe concentration of Bisphenol A that must be present in surface water: $\leq 1 \mu g \cdot L^{-1}$ (USEPA, 2010). From a comparison of these concentration values with those that cause sub-lethal effects on fish, it can be seen that forced testing uses concentrations higher than levels considered safe, so that toxicity is normally expected to occur.

Is the exposure time used in ecotoxicological tests really ecologically relevant? Are the doses of the pollutants so continuous and stable that organisms remain in the same region for several hours or days in the same concentration conditions as they were primarily exposed? In this sense, we must take into account the characteristics of the habitat in which the organism is inserted, whether it is a lotic or lentic environment, deducing then if they are environments with more homogeneous or heterogeneous characteristics, and if this factor is intrinsically related to the dilution potential of the pollutants present (Esteves, 1998).

The study of avoidance behavior of aquatic organisms exposed to pollutants is a complementary approach to ecotoxicological tests, focusing no longer on the individual, limiting the environmental risk assessment, but on the population and its

spatial distribution. Several methodologies were employed to simulate more realistically the environmental conditions in which individuals were exposed. Among these approaches, the first experiment with a focus on avoidance of pollutants was developed by Jones (1947, 1948), simulating a clean and contaminated area with the stressor, injecting clean contaminated water on one side and contaminant on the other (Figure 1).

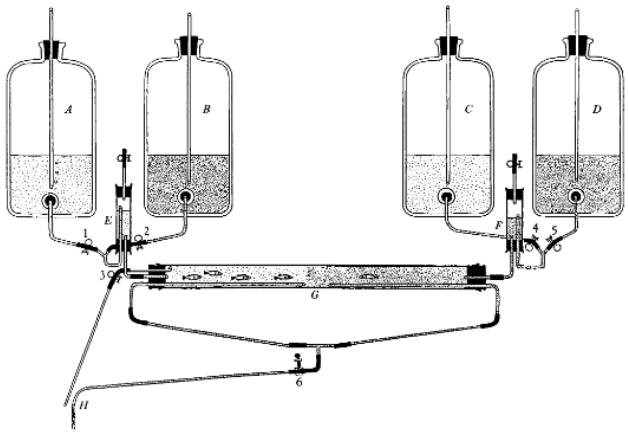

Figure 1. General scheme of the apparatus using a central glass tube with 30 mm of diameter and 58 cm of length with a capacity of 400 ml (Source: Jones, 1947).

Another system used (Figure 2) consisted of the formation of two tanks with a flow rate of 400 mL·min^{-1} per side (one control side and the other treatment) (Gun and Noakes, 1986).

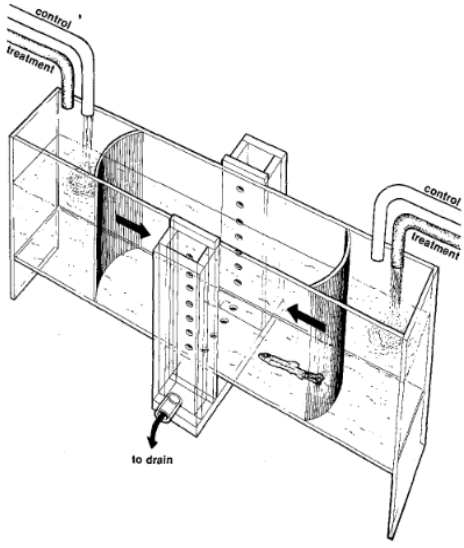

Figure 2. Bi-compartmentalized system. Dimensions: 23x5x10cm (Source: Gun and Noakes, 1986).

In both systems there are two distinct areas with a marked difference in contaminant concentration (control and treatment), allowing fish to discriminate between the two environments. This approach is applicable to verify the ability to detect the contaminants and chose the zone with the least stress, but does not allow to simulate a real field situation where the formation of gradients is expected (Araújo et al., 2016a).

A new approach has recently been applied, taking into consideration the concept of avoidance and the question of the formation of contamination gradients, simulating with more precision what would occur in environments where dilution may occur, such as rivers and large lakes (lotic regions). The two linear systems (Moreira-Santos et al, 2008 [Figura 3-A]; Araújo et al, 2014 [Figura 3-B]) presented below, are formed by interconnected chambers, which allow the free passage of the organisms, allowing them to move in any direction (left or right). In this approach, a contamination gradient between the first and last chamber is produced, with free access by the organisms to any chamber. At the same time as it allows the passage of the fish, the reduced opening avoids diffusion between the compartments. The difference between both examples is that in the first one (figure 3-A) there is a renewal of the solution in each chamber through peristaltic pumps, while the second is static (Figure 3-B).

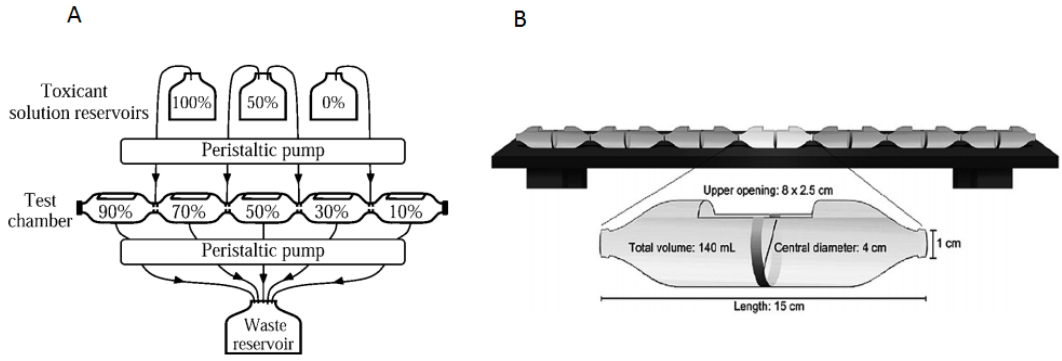

Figure 3. Ilustration of non-forced systems for conducting small fish tests. (A): Avoidance system with renewal of solutions by peristaltic pumps. (B) Static avoidance system (Source: Moreira-Santos et al, 2008 [A] and Araújo et al, 2014 [B]).

Generally, in aquatic ecosystems, there is dispersion / dilution of the pollutants released (López-Doval et al., 2017), forming a gradient of contamination. That is,

avoidance can be estimated in an environment simulating real environmental conditions (Moreira-Santos et al, 2008; Rosa et al, 2008; 2012). Thus, toxicity assays whose organisms are exposed in confined conditions with no possibility of escape or even in bicompartmental systems are often a non-realistic simulation of exposure (Araújo et al., 2016a).

The environmental risk analysis is a methodological tool that allows estimating the risk of producing certain consequences in the environment, becoming an artifice for the making of environmentally justified decisions (GEOdata, 2017). These studies try to answer such questions as: What is the danger presented? Who is affected and what are the most appropriate actions to control risks? For example, in the case of pollution by pharmaceuticals, on the basis of ecotoxicological data, approaches can occur mainly through the estimation of hazard quotients (HQ), which are defined as the ratio of predicted environmental concentrations or measures and its chronic toxicity (Ginebreda et al., 2010). In this sense, avoidance tests aim to analyze how much any substance negatively affects the pattern of distribution / selection of habitat by aquatic organisms, being an approach to environmental risk analysis.

Therefore, the traditional use of forced exposure in bioassays can be justified based on many reasons, among which the main three are cited: (i) they are easy to use, (ii) they allow the establishment of an unambiguous concentration relation on an individual level and (iii) provide an easy interpretation of the results. However, if the main ecological effects of stressors to be measured are those occurring at community and ecosystem levels, individual effects measured under forced exposure may limit the assessment of environmental risks (Amiard-Triquet, 2009).

Several studies have been using the non-forced exposure system, and fish responses are similar to those described in this paper, such as *D. rerio* (Moreira-Santos et al., 2008), *Rachycentron canadum* (Araújo et al., 2015) and *Oreochromis* sp. (Araújo et al., 2016). This system has also been applied in other researches, with distinct organisms, showing the ability of bionicators to detect stressors and move to less contaminated areas: amphibians (Vasconcelos et al., 2016) and invertebrates (Lopes, et al., 2004; Araújo et al., 2016).

This methodology, as already mentioned, allows a more realistic approach, since it simulates the environmental conditions in which organisms are exposed. It is important to highlight that the avoidance response can be influenced by different

environmental factors, and not only the pollution. Among these factors (biotic and abiotic) are: Escape due to the presence of predators (Wolf and Phelps, 2017), differences in the natural concentration of CO_2 (Cupp et al., 2017), reduction in dissolved oxygen concentration / increase in temperature (Stehfest et al., 2017), turbidity (Robertson et al., 2007), among others.

Thus, the thesis demonstrates the avoidance response in fish exposed to different contaminants, such as:

- Triclosan: is added as a preservative or antiseptic agent to medical products such as hand disinfecting soaps, medical skin creams, and dental products (Jones et al., 2000).
- Bisphenol A: is used in the manufacture of many products including food and beverage packaging, flame retardants, adhesives, building materials, electronic components, and paper coatings (Fromme et al., 2002; Liu et al., 2017).
- Atrazine: its one of the most common herbicides used to control weeds and grasses in several crops (Graymore et al., 2001; Kannan et al., 2006; Jablonowski et al., 2011; Botelho et al., 2015)
- Copper: It is used in reservoirs as algicide (Cardoso-silva et al., 2016), besides its strong presence in high concentrations in regions with metal mining (Abraham and Susan, 2017).

Therefore, the approach given in this work was the behavior of fish when exposed to such contaminants, being chosen these substances for their adverse effects on aquatic biota (lethal and sub-lethal), as will be presented in the course of this document.

This work is structured in 4 chapters in the format of articles structured according to the periodicals that have been or will be submitted. Below are some questions that will be answered within each chapter:

- Chapter (i): How can different contamination scenarios (wider and shorter gradients) influence the avoidance response in fish? Can the results (mortality) obtained in forced tests be considered overestimated, since fish in real conditions can move to less contaminated areas? What is the expected population immediate decline in environmentally relevant concentrations?

- Chapter (ii): How environmentally relevant is the avoidance response to fish and how safe are the limits set by international agencies for the concentrations of pollutants found in surface waters when studying the avoidance response?
- Chapter (iii): Can contaminants cause habitat fragmentation, producing a chemical barrier to the flow of individuals?
- Chapter (iv): How can species density and interaction influence the avoidance response in environments where there are gradients of contamination by aquatic pollutants?

The central hypothesis of this work is that fish have the ability to detect pollutants and move to less polluted areas, and that due to pollution loads in rivers and lakes (where gradients occur), there will be a local decline in population, taking into account organisms that scaped and those who for some reason stayed and died on the spot. Thus, we can say that the pollutants can interfere on the spatial distribution and therefore in the selection of habitat.

2. General Conclusions

Habitat disturbance due to contamination can restrict habitable areas, modify migratory mechanisms and cause instability for the community dynamics. Thus, this study contributed in different ways to the understanding of the influence of the aquatic pollutants on the dispersion and habitat selection by the fish *P. reticulata* and *D. rerio*. The methodology used, simulating a contamination gradient, makes it possible to create environments similar to those that would occur in any water body, in which the pollutant load is reduced as it distances from its generating source. Several different approaches were worked on in this study, where we could understand various patterns of dispersion of organisms when exposed to different scenarios, such as:

- Gradients of pollution
- Chemical Barriers
- Interspecific interactions

Thus, we will answer the questions asked in the "General Introduction" section, separated by each chapter:

- Chapter I:
  - How can different contamination scenarios (spatially permanent gradient and a local discharge) influence the avoidance response in fish?

    The avoidance response was concentration-dependent and although it was not dependent on the intensity of the gradient, the gradient nonetheless influenced the AC_{50}.
  - Can the results (mortality) obtained in forced tests be considered overestimated, since fish in real conditions can move to less contaminated areas?

    The use of forced exposure could underestimate the environmental risks (population downsizing) of contamination, since it does not consider spatial avoidance as a potential response to the presence of a

contaminant. On the other hand, it could overestimate lethal effects, due to the mandatory exposure of mobile organisms.

- What is the expected population immediate decline in environmentally relevant concentrations?

  The observed response suggested that the population of *P. reticulata* could decrease at the local scale following exposure to environmentally relevant TCS concentrations lower than 2 $mg \cdot L^{-1}$.

- Chapter II:
  - How environmentally relevant is the avoidance response to fish and how safe are the limits set by international agencies for the concentrations of pollutants found in surface waters when studying the avoidance response?

    In summary, even at environmentally relevant concentrations, BPA has the capacity to trigger an avoidance response in *P. reticulata*, causing displacement of the fish to less contaminated areas and consequent population decline at the local scale. Comparison of the results obtained here with the BPA values considered safe by international agencies showed that avoidance would be expected to occur at lower concentrations, before detection of any acute or chronic effects.

- Chapter III
  - Can contaminants cause habitat fragmentation, producing a chemical barrier to the flow of individuals?

    Contamination by atrazine can influence the spatial distribution of the fish populations. Moreover, atrazine can cause a habitat fragmentation by forming a chemical barrier that can totally or partially isolate populations.

- Chapter IV
  - How can species density and interaction influence the avoidance response in environments where there are gradients of contamination by aquatic pollutants?

    In the multispecific tests (with two species in the same system), even in the presence of copper, which caused avoidance in *D. rerio*, the presence of *P. reticulata* affected the distribution of the former specie, reducing its migration potential.

So what is the overall importance of avoidance?

- Its allows organisms to reduce or eliminate the toxic effects of contaminants
- Its poses a serious threat to communities due to the marked emigration of organisms

The occurrence of contaminant avoidance may have immediate and wider ecological implications (ecosystem level) than predicted for a sub-lethal response (focus on the individual). The preference or avoidance of stressors can be determinant for the occurrence of species that inhabit contaminated ecosystems and should be taken into account aspects such as competition, selective predation, availability of resources, etc. Therefore, is inevitable to endorse the recommendation for including avoidance as a complementary endpoint within the ecotoxicological line-of-evidence of environmental risk analysis schemes, at least at higher tiers, along with sub-lethal chronic tests.

References

Abraham, M.R., Susan, T.B., 2017. Water contamination with heavy metals and trace elements from Kilembe copper mine and tailing sites in Western Uganda ; implications for domestic water quality. Chemosphere 169, 281–287. doi:10.1016/j.chemosphere.2016.11.077

Amiard-Triquet, C., 2009. Behavioral Disturbances : The Missing Link between Sub-Organismal and Supra-Organismal Responses to Stress? Prospects Based on Aquatic Research Behavioral Disturbances: The Missing Link between to

Stress? Prospects Based on Aquatic Research. Hum. Ecol. Risk Assess. An Int. J. 15, 87–110. doi:10.1080/10807030802615543

Araújo, C.V.M., Cedeño-Macías, L.A., Vera-Vera, V.C., Salvatierra, D., Rodríguez, E.N. V., Zambrano, U., Kuri, S., 2015. predicting the effects of copper on local population decline of 2 marine organisms , cobia fish and whiteleg shrimp , based on avoidance response. Environ. Toxicol. Chem. 35, 405–410. doi:10.1002/etc.3192

Araújo, C.V.M., Moreira-Santos, M., Ribeiro, R., 2016a. Active and passive spatial avoidance by aquatic organisms from environmental stressors: A complementary perspective and a critical review. Environ. Int. 92–93, 405–415. doi:10.1016/j.envint.2016.04.031

Araújo, C.V.M., Rodríguez, E.N. V, Salvatierra, D., Vera-vera, V.C., Moreira-santos, M., Ribeiro, R., Cede, L.A., 2016b. Attractiveness of food and avoidance from contamination as con fl icting stimuli to habitat selection by fish. Chemosphere 163, 177–183. doi:10.1016/j.chemosphere.2016.08.029

Araújo, C.V.M., Shinn, C., Mendes, L.B., Delello-schneider, D., Sanchez, A.L., Espíndola, E.L.G., 2014. Avoidance response of *Danio rerio* to a fungicide in a linear contamination gradient. Sci. Total Environ. 484, 36–42. doi:10.1016/j.scitotenv.2014.03.037

Botelho, R.G., Monteiro, S.H., Christofoletti, C.A., Moura-Andrade, G.C.R., Tornisielo, V.L., 2015. Environmentally relevant concentrations of atrazine and ametrine induce micronuclei formation and nuclear abnormalities in erythrocytes of fish. Arch. Environ. Contam. Toxicol. 69, 577-585.

Cardoso-silva, S., Silva, D.C.V.R., Lage, F., Paiva, T.C.B., Moschini-Carlos, V., Rosa, A.R., Pompêo, M.L.M., 2016. Metals in sediments : bioavailability and toxicity in a tropical reservoir used for public water supply. Env. Monit Assess 188, 310. doi:10.1007/s10661-016-5276-5

Cupp, A.R., Tix, J.A., Smerud, J.R., Erickson, R.A., Fredricks, K.T., Amberg, J.J., Suski, C.D., Wakeman, R., 2017. Using dissolved carbon dioxide to alter the behavior of invasive round goby. Manag. Biol. Invasions 8, 567–574.

Fromme, H., Thomas, K., Wenzel, A., 2002. Occurrence of phthalates and bisphenol A and F in the environment. Water Res. 36, 1429–1438.

GEOdata, I.A., 2017. Análisis de Riesgo Ambiental [WWW Document]. URL

http://www.geodatargentina.com.ar/html/estudios_ambientales/geodata_est_amb_analisis_riesgo_ambiental.html (accessed 11.1.17).

Ginebreda, A., Muñoz, I., López, M., Alda, D., Brix, R., López-doval, J., Barceló, D., 2010. Environmental risk assessment of pharmaceuticals in rivers : Relationships between hazard indexes and aquatic macroinvertebrate diversity indexes in the Llobregat River (NE Spain). Environ. Int. 36, 153–162. doi:10.1016/j.envint.2009.10.003

Graymore, M., Stagnitti, F., Allinson, G., 2001. Impacts of atrazine in aquatic ecosystems. Environ. Int. 26, 483-495.

Jablonowski, N.D., Schäffer, A., Burauel, P., 2011. Still present after all these years: persistence plus potential toxicity raise questions about the use of atrazine. Environ. Sci. Pollut. Res. 18, 328-331.

Jones, R.D., Aam, R.M., Newman, J.L., Lee, A.S., 2000. Triclosan : A review of effectiveness and safety in health care settings. Am. J. Infect. Control 28, 184–196. doi:10.1067/mic.2000.102378

Kannan, K., Ridal, J., Struger, J., 2006. Pesticides in Great Lakes. Hdb. Env. Chem. 5, 151-199.

Liu, Y., Zhang, S., Song, N., Guo, R., Chen, M., Mai, D., Yan, Z., Han, Z., Chen, J., 2017. Occurrence, distribution and sources of bisphenol analogues in a shallow Chinese freshwater lake (Taihu Lake): Implications for ecological and human health risk. Sci. Total Environ. 599–600, 1090–1098. doi:10.1016/j.scitotenv.2017.05.069

Lopes, I., Baird, D.J., Ribeiro, R., 2004. Avoidance of copper contamination by field population of Daphnia longispina. Env. Toxicol. Chem. 23, 1702–1708.

López-Doval, J.C., Meirelles, S.T., Cardoso-Silva, S., Moschini-Carlos, V., Pompêo, M.L.M., 2016. Ecological and toxicological responses in a multistressor scenario: Are monitoring programs showing the stressors or just showing stress? A case study in Brazil. Sci. Total Environ. 540, 466-476.

López-Doval, J.C., Montagner, C.C., Fernandes, A., Alburquerque, D., Moschini-carlos, V., Umbuzeiro, G., Pompêo, M., 2017. Nutrients , emerging pollutants and pesticides in a tropical urban reservoir : Spatial distributions and risk assessment. Sci. Total Environ. 575, 1307–1324. doi:10.1016/j.scitotenv.2016.09.210

Moreira-Santos, M., Donato, C., Lopes, I., Ribeiro, R., 2008. Avoidance tests with small fish : determination of the median avoidance concentration and of the lowest-observed-effect gradient. Environ. Toxicol. Chem. 27, 1576–1582.

Robertson, M.J., Scruton, D.A., Clarke, K.D., 2007. Seasonal Effects of Suspended Sediment on the Behavior of Juvenile Atlantic Salmon. Trans. Am. Fish. Soc. 136, 822–828. doi:10.1577/T06-164.1

Rosa, R., Materatski, P., Moreira-Santos, M., Sousa, J.P., Ribeiro, R., 2012. A scaled-up system to evaluate zooplankton spatial avoidance and the population immediate decline concentration. Environ. Toxicol. Chem. 31, 1301–1305. doi:10.1002/etc.1813

Stehfest, K.M., Carter, C.G., Mcallister, J.D., Ross, J.D., Semmens, J.M., 2017. Response of Atlantic salmon Salmo salar to temperature and dissolved oxygen extremes established using animal-borne environmental sensors. Sci. Rep. 1–10. doi:10.1038/s41598-017-04806-2

USEPA - U. S. Environmental Protection Agency, 2010. Bisphenol A Action Plan.

Vasconcelos, A.M., Daam, M.A., Sanches, A.L.M., Arau, C.V.M., 2016. Acute and chronic sensitivity , avoidance behavior and sensitive life stages of bullfrog tadpoles exposed to the biopesticide abamectin. Ecotoxicology 500–509. doi:10.1007/s10646-015-1608-4

Wolf, M.C., Phelps, Q.E., 2017. Prey selectivity of common predators on Silver carp (Hypophthalmichthys molitrix): controlled laboratory experiments support field observations. Env. Biol Fish 100, 1139–1143. doi:10.1007/s10641-017-0630-1

3. Biography

I am graduated in Biology, UNIFATEA, Lorena-SP (2007), specialist in Environmental Engineering, Engineering School of Lorena-USP (2009), Lorena-SP, and MSc in Sciences: Ecology, University of São Paulo (Institute of Biosciences), São Paulo-SP (2013).

The most relevant publications i have are:

Published articles:

Silva, D. C. V. R.; Araújo, C. V. M. ; López-Doval, J. C. ; Neto, M. B. ; Paiva, T. C. B.; Silva, F. T.; Pompêo, M. L. M. . Potential effects of triclosan on spatial displacement and local population decline of the fish *Poecilia reticulata* using a non-forced system. Chemosphere, v. 184, p. 329-336, 2017.

Cardoso-Silva, Sheila; **Silva, Daniel Clemente Vieira Rêgo**; Lage, Fernanda; Paiva, Teresa Cristina Brazil; Moschini-Carlos, Viviane; Rosa, André Henrique; Pompêo, Marcelo . Metals in sediments: bioavailability and toxicity in a tropical reservoir used for public water supply. Environmental Monitoring and Assessment, v. 188, p. 188: 310, 2016.

Pompêo, Marcelo; Padial, Paula Regina; Mariani, Carolina Fiorillo; Cardoso-Silva, Sheila; Moschini-Carlos, Viviane; **Silva, Daniel Clemente Vieira Rêgo**; Paiva, Teresa Cristina Brazil; Brandimarte, Ana Lúcia. Ecological risk index for aquatic pollution control: a case study of coastal water bodies from the Rio de Janeiro State, southeastern Brazi. Geochimica Brasiliensis (Rio de Janeiro), v. 27, p. 104-119, 2013.

Articles accepted for publication:

Silva, D. C. V. R.; Queiroz, L. G. ; Cardoso-Silva, S. ; Fernandes, J. G.; Alamino, D. A.; Paiva, T. C. B. ; pômpeo, M. M. L. Evaluation of the efficiency of a trophic state index in determining the water quality of public water supply reservoirs. Engenharia Sanitária e Ambiental, 2017.

Book chapters:

Pompêo, M.; Moschini-Carlos, V.; Cardoso-Silva, S.; Paiva, T. C. B.; **SILVA, D. C. V. R.** Ecologia de reservatórios e interfaces. 1ª ed., 2014.

At the moment i have two articles being reviewed by Chemosphere and Aquatic Toxicology magazines.

e-mail: daniel_cruzeiro@yahoo.com.br